H44 Series Pair of Clips

Secure tray closure for safe handling, shipping, and storage

The H44 series pair of clips is a two-piece, interlocking clip system designed for use with H44 Series 4" square bare die trays. The clips are applied as a pair and lock together at the center of the tray to maintain secure contact between a tray and its cover during handling and transport.

The clip system supports safe handling across all device types, including known good die (KGD), chip scale packages (CSP), and wafer scale packages (WSP).

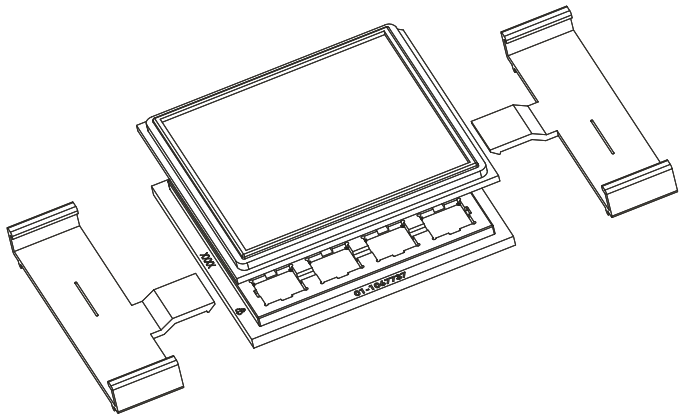

H44-04 pair of clips

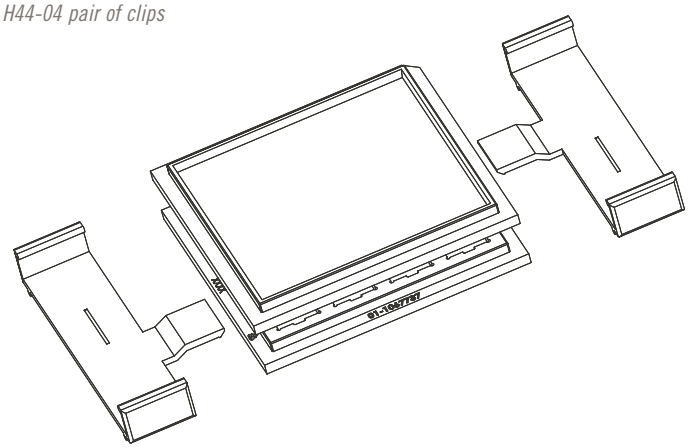

H44-041 pair of clips

APPLICATIONS

- For use with H44 Series 4" square trays
- Tray-to-tray retention (stacking)
- Transport and storage of semiconductor devices
- Manual and automated handling environments

FEATURES & BENEFITS

Two-piece interlocking clip system	Reduces risk of tray/cover separation during handling
Material options	Includes natural polypropylene and ESD-safe materials
Reliable protection	Supports consistent handling and protection of sensitive semiconductor devices
Compatible with automation	Designed to integrate with manual and automated tray handling environment

SPECIFICATIONS

	H44-04	H44-041	H44-043
Configuration	Sold in pairs	Sold in pairs	Sold in pairs
Capacity (by variant)	1 tray or 1 tray plus cover	2 trays or 1 tray plus cover	10 trays plus 1 cover
Minimum order quantity	50	50	50

DIMENSIONS

H44-04

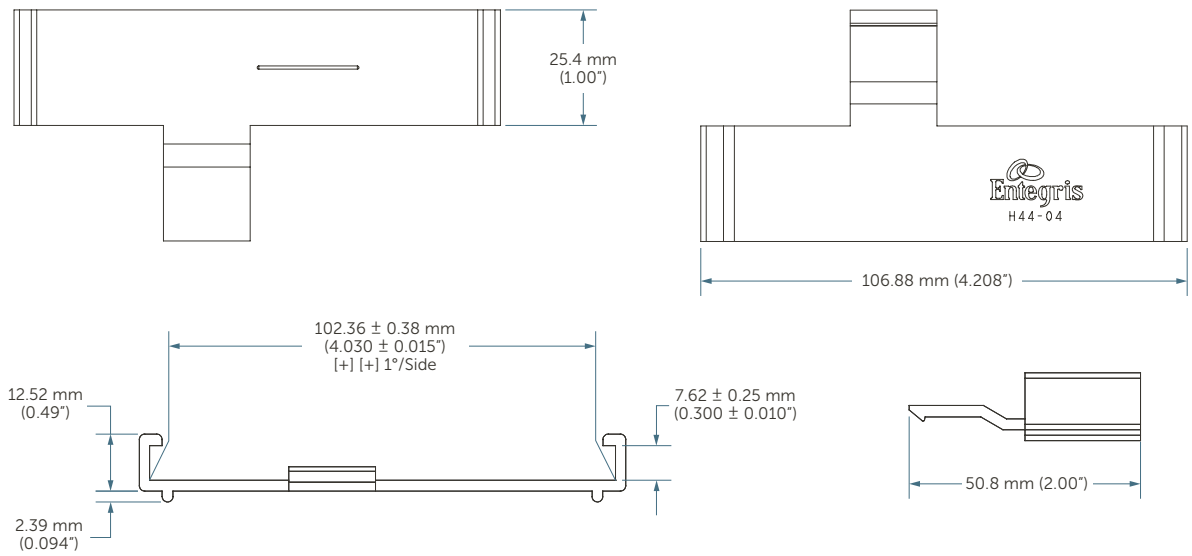

H44-041

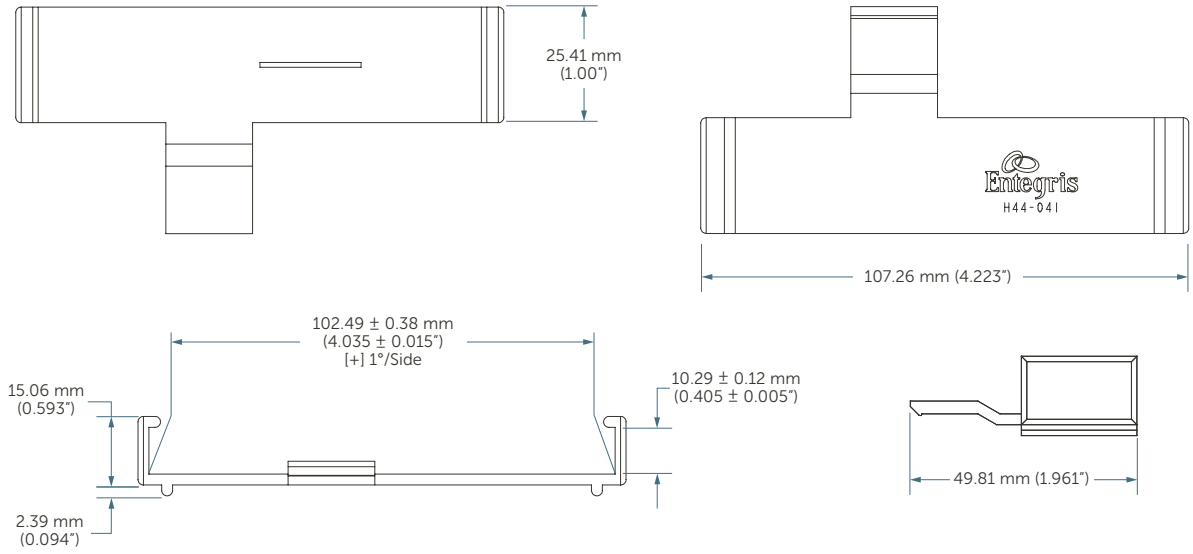

ORDERING INFORMATION

Part number	Material	Static protective	Capacity
H44-04-0615	Natural polypropylene	No	2 trays + 1 cover
H44-04-61C02	STAT-PRO®	No	2 trays
H44-041-0615	Natural polypropylene	No	2 trays or 1 tray + H44-02LR cover
H44-041-61C02	STAT-PRO®	Yes	2 trays or 1 tray + H44-02LR cover

FOR MORE INFORMATION

Please call your Regional Customer Service Center today to learn what Entegris can do for you. Visit entegris.com and select the Contact Us link to find the customer service center nearest you.

TERMS AND CONDITIONS OF SALE

All purchases are subject to Entegris' Terms and Conditions of Sale. To view and print this information, visit entegris.com and select the Terms & Conditions link in the footer.

Entegris

Corporate Headquarters
129 Concord Road
Billerica, MA 01821
USA

Customer Service
Tel +1 952 556 4181
Fax +1 952 556 8022
Toll Free 800 394 4083

Entegris®, the Entegris Rings Design®, and other product names are trademarks of Entegris, Inc. as listed on entegris.com/trademarks. All third-party product names, logos, and company names are trademarks or registered trademarks of their respective owners. Use of them does not imply any affiliation, sponsorship, or endorsement by the trademark owner.

©2026 Entegris, Inc. | All rights reserved. | Printed in the USA | 2110-14739ENT-1126